Normal safety valve. (AN)

Mod. 584 | ASME | USCS

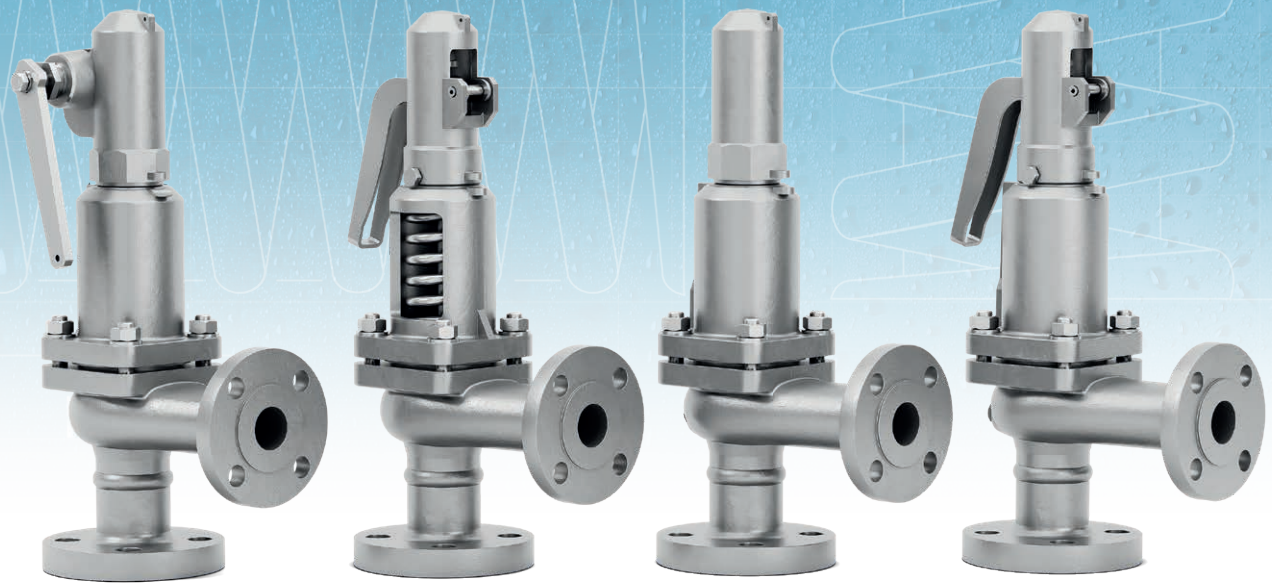

EP AP ES CP

Operation

The valve works as an automatic pressure releasing regulator activated by the static pressure existing at the entrance to the valve and is characterized by its ability to open, at the first proportional to the pressure increase, and after instantly and totally.

Regulation

- PED 2014/68/EU
- UNE-EN ISO 4126-1
- ASME B16.34
- ASME B16.5

Specifications

Size

- 1" x 1" to 2" x 2"

Temperature range

- -76 ˚F to +842 ˚F

Applications

- Gas, steam and liquid

Materials

- Carbon steel
- Stainless steel

MAximum pressure

- Up to 1377,86 psi

Certification

PED 2014/68/EU
Module D
TÜVRheinland
CERTIFIED
www.tuv.com
ID 1100006108

N°. PIECE	PIECE	MATERIAL	
		CARBON STEEL	STAINLESS STEEL
1	Body	Carbon steel (SA 216-WCB)	Stainless steel (SA 351-CF8M)
2	Closed bell	Carbon steel (SA 536 65-45-12)	Stainless steel (SA 351-CF8M)
3	Open bell	Carbon steel (SA 216-WCB)	Stainless steel (SA 351-CF8M)
4	Hood	Carbon steel (SA 536 65-45-12)	Stainless steel (SA 351-CF8M)
5	Elevator	Stainless steel (SA 536 65-45-12) (1)	Stainless steel (SA 351-CF8M) (5)
6	Cam	Stainless steel (AISI 304) (4)	Stainless steel (AISI 304)
7	Lever	Stainless steel (SA 536 65-45-12)	Stainless steel (SA 536 65-45-12)
9	Plug	Stainless steel (AISI 420)	Stainless steel (AISI 630)
10	Lead	Stainless steel (AISI 420)	Stainless steel (AISI 316)
11	Spring press	Carbon steel (AISI 1045)	Stainless steel (AISI 303)
12	Separator	Stainless steel (AISI 420)	Stainless steel (AISI 316)
13	Rod	Stainless steel (AISI 420)	Stainless steel (AISI 316)
14	Lever shaft	Carbon steel (AISI 1045)	Stainless steel (AISI 303)
15	Gudgeon	Carbon steel (AISI 1070)	Stainless steel (AISI 301 / SA 313-302)
16	Ring	Stainless steel (AISI 420)	Stainless steel (AISI 316)
17	Safety ring	Stainless steel (AISI 301 / SA 313-302)	Stainless steel (AISI 301 / SA 313-302)
18	Spring	Vanadium chrome steel (AISI 6150 / SA 304) (2)	Stainless steel (AISI 301 / SA 313-302) (3)
19	Gland	Carbon steel (AISI 1045)	Stainless steel (AISI 303)
20	Hollow screw	Stainless steel (AISI 303)	Stainless steel (AISI 303)
21	Hollow screw nut	Stainless steel (AISI 303)	Stainless steel (AISI 303)
22	Buffer nut	Stainless steel (AISI 303)	Stainless steel (AISI 303)
23	Rod check nut	Carbon steel (AISI 1015)	Stainless steel (AISI 316)
24	Nut	Carbon steel (AISI 1015)	Stainless steel (AISI 316)
25	Washer	Carbon steel (AISI 1015)	Stainless steel (AISI 316)
26	Stud	Carbon steel (AISI 1035)	Stainless steel (AISI 316)
27	Screw	Carbon steel (AISI 1045)	Stainless steel (AISI 316)
28	Cap	Carbon steel (AISI 1035)	Stainless steel (AISI 316)
29	Coupling	Graphite	PTFE (Teflon)
30	Coupling	PTFE (Teflon)	PTFE (Teflon)
31	Seal	Graphite	PTFE (Teflon)
NPS1 x NPS2		1" x 1" to 2" x 2"	
CLASS [lbs]		600	
PN		160	160
OPERATING CONDITIONS	PRESSURE [psi]	1377,86	1377,9
	MAXIMUM TEMPERATURE [°F]	842	842
	MINIMUM TEMPERATURE [°F]	14	-76

(1) 1" x 1" in Stainless steel EN-1.4408 (SA351-CF8M)
(2) Spring in SH for 435,11 - 580,15 psi and 551,14 - 725,19 psi in 1" x 1". Spring in SH for 435,11 - 580,15 psi in 1 1/4" x 1 1/4".

ES isometric view

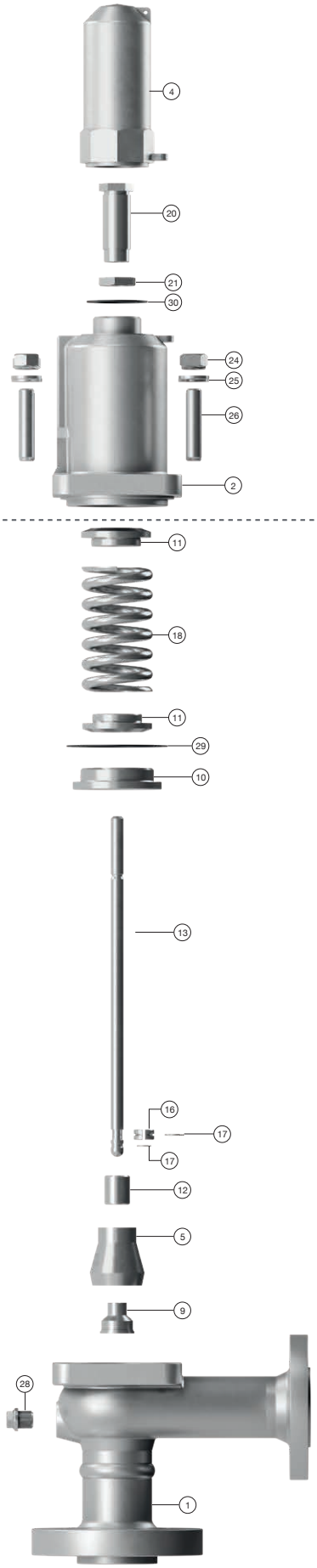

ES Exploded view

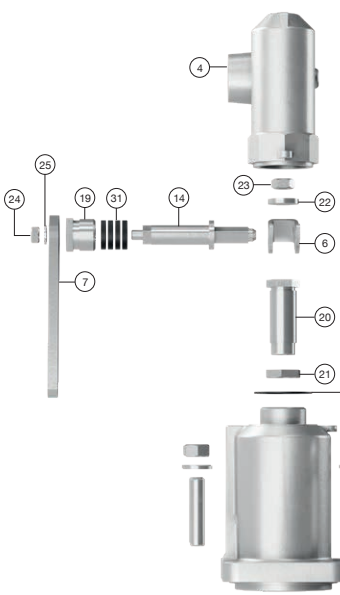

Lever arrangement

EP Hood exploded view

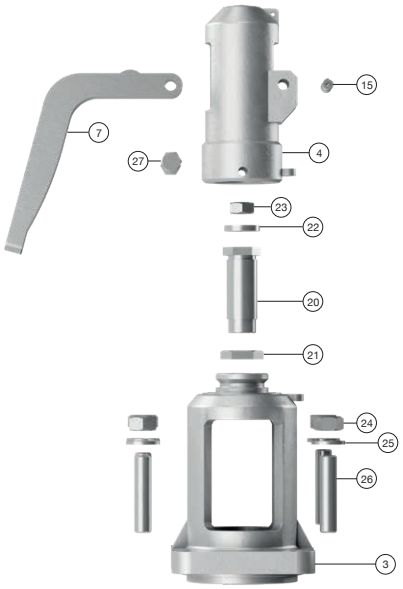

AP Hood exploded view

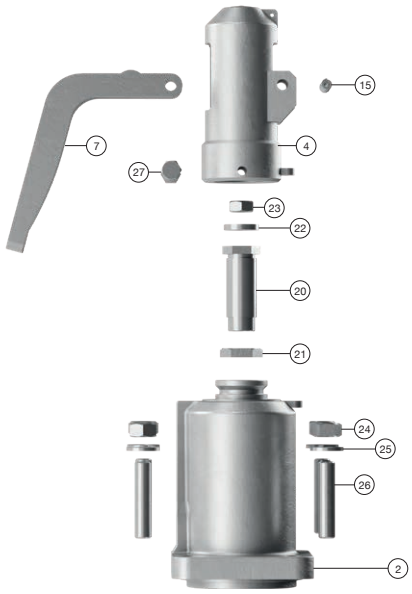

CP Hood exploded view

DIMENSIONS						
NPS1 x NPS2			1" x 1"	1 1/4" x 1 1/4"	1 1/2" x 1 1/2"	2" x 2"
API ORIFICE			D - E	F	G	H
do ["]			0,63	0,79	0,98	1,26
Ao: $\frac{\pi \cdot do^2}{4}$ ["^{2}]			7,91	12,36	19,33	31,65
H ["]			14,96	16,14	18,70	21,46
h1 ["]			5,91	5,91	5,91	5,91
L1 ["]			3,94	4,33	4,92	5,71
L2 ["]			3,94	4,33	4,92	5,71
R			1/4"	1/4"	1/4"	1/4"
			Female Threads Gas Whitworth Cylindrical ISO 228/1 (DIN-259)			
INLET FLANGE	Class 600 ASME B16.5	D1 ["]	5,51	6,10	6,69	7,68
		K1 ["]	3,94	4,33	4,92	5,71
		d1 ["]	0,71	0,87	0,87	1,02
		C1 ["]	0,87	0,94	0,98	1,06
		SCREWS N°	4	4	4	4
OUTLET FLANGE	Class 150 ASME B16.5	D2 ["]	4,53	5,51	5,91	6,50
		K2 ["]	3,35	3,94	4,33	4,92
		d2 ["]	0,55	0,71	0,71	0,71
		C2 ["]	0,71	0,71	0,71	0,79
		SCREWS N°	4	4	4	4

MODEL		EP	AP	ES	CP	EP	AP	ES	CP	EP	AP	ES	CP	EP	AP	ES	CP
WEIGHT [kg]	CARBON STEEL / STAINLESS STEEL	22,4	20,0	20,6	21,0	29,8	27,0	27,4	28,4	43,9	43,9	40,3	41,7	63,0	57,3	58,9	60,8
CODE	CARBON STEEL 2002-584.	0104D	01041D	01042D	01043D	0144F	01441F	01442F	01443F	0124F	01241F	01242F	01243F	0204F	02041F	02042F	02043F
	STAINLESS STEEL 2002-584.	0102D	01021D	01022D	01023D	0142F	01421F	01422F	01423F	0122F	01221F	01222F	01223F	0202F	02021F	02022F	02023F

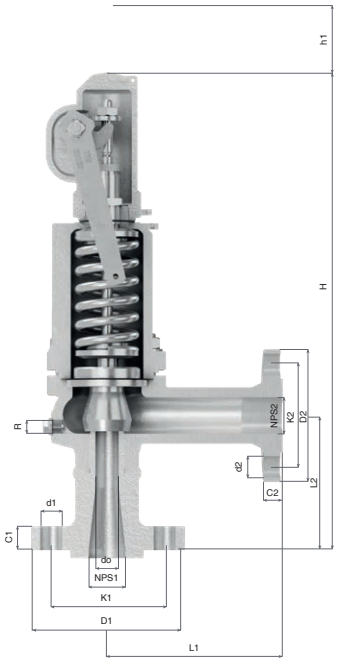

EP

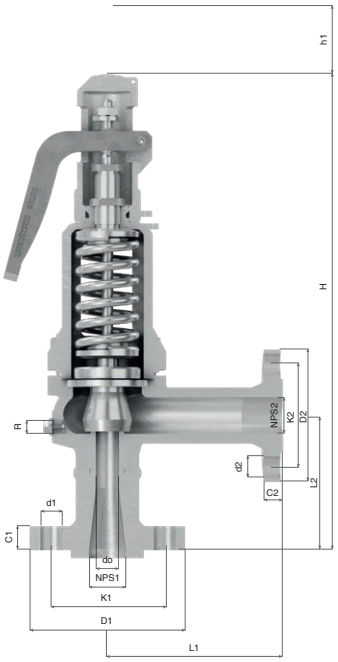

AP

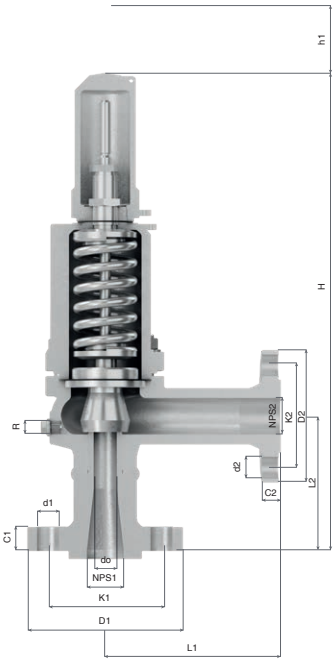

ES

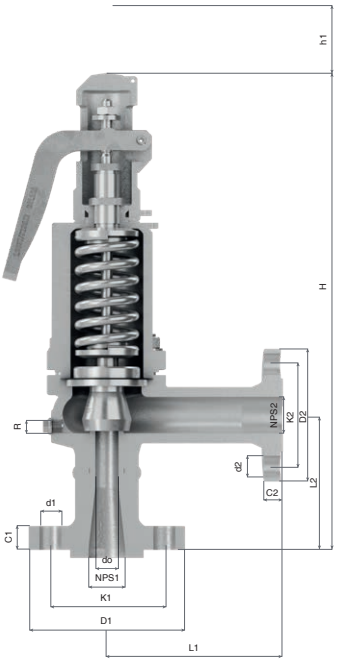

CP

PRESSURES AND SPRING REGULATION RANGES						
NPS1 x NPS2			1" x 1"	1 1/4" x 1 1/4"	1 1/2" x 1 1/2"	2" x 2"
API ORIFICE			D-E	F	G	H
REGULATION PRESSURE [psig]	**MAXIMUM** (LIQUIDS AND GASES)	600#	1377,88	1377,88	1377,88	1377,88
	MAXIMUM (SATURATED STEAM)	600#	1377,88	1377,88	1377,88	1377,88
	MINIMUM	STEAM AND GASES	435,12	435,12	435,12	333,59
		LIQUIDS	551,15	551,15	551,15	435,12
SPRING REGULATION RANGES [psig]	333,59 to 464,13	CODE				56258
	435,12 to 580,16	CODE	**56211** 56390	**56227** 56390	**56243**	**56259**
	551,15 to 725,20	CODE	**56212** 56391	**56228** 56391	**56244**	**56260**
	696,19 to 899,25	CODE	**56213** 56391	**56229** 56391	**56245**	**56261**
	870,24 to 1131,31	CODE	**56214** 56391	**56230**	**56246**	**56262**
	1087,80 to 1377,88	CODE	**56215** 56391	**56231**	**56247**	**56263**

—— Spring steel (EN-1.0270-1-SH). Maximum temperature for models EP, ES and CP 482 °F / AP 752 °F.
—— Stainless steel (AISI 303).
▭ Chrome-vanadium steel (AISI 6150 / SA 304).

RECOMMENDED RANGES OF APPLICATION						
MODEL			EP	AP(1)	ES	CP(1)
FLUID		SATURATED STEAM	*	*		*
		GASES	*		*	
		LIQUIDS	*		*	
PERMISSIBLE BACK PRESSURE IN % OF SET PRESSURE	INTERNAL OR GENERATED	SATURATED STEAM GASES	15			
		LIQUIDS	—			
	EXTERNAL VARIABLE (1)	SATURATED STEAM	—			
		LIQUIDS	—			
	EXTERNAL CONSTANT (1) (2) (3)	SATURATED STEAM GASES	50			
		LIQUIDS	90			
% OVERPRESSURE		SATURATED STEAM GASES	10			
		LIQUIDS	25			

(1) If external backpressure exists, the AP and CP model cannot be used.
(2) With external constant backpressure, the spring is adjusted deducting the backpressure from the set pressure.
(3) If the set pressure < 43,51 psi we must consider the total atmospheric pressure (14,5 psi) as external constant backpressure being freely released.

If pb > 0,25 po we must limit plug speed with the consequent reduction of the Kdr coefficient of discharge. With the new reduced coefficient we determine the do, in order to remove the necessary volume.

pb = Backpressure permitted [psi] absolute. po = Set pressure [psi] absolute. Kdr = Coefficient of discharge.

OPEN AND CLOSED PRESSURES IN % OF SET PRESSURE			
FLUID	PRESSURE [psi]	OPENING PRESSURE	CLOSING PRESSURE
SATURATED STEAM	< 43,51	+ 10 %	- 4,35 psi
GASES	≥ 43,51	+ 10 %	- 10 %
LIQUIDS	< 43,51	+ 10 %	- 8,70 psi
	≥ 43,51	+ 10 %	- 20 %

COEFICIENTES DE DESCARGA				
NPS1 x NPS2	1" x 1"	1 1/4" x 1 1/4"	1 1/2" x 1 1/2"	2" x 2"
API ORIFICE	D-E	F	G	H
do ["]	0,63	0,79	0,98	1,26
h ["]	0,098	0,098	0,110	0,157
h/d0 ["]	0,006	0,005	0,004	0,005
STEAM AND GASES [Kdr]	0,25			
LIQUIDS [Kdr]	0,25			

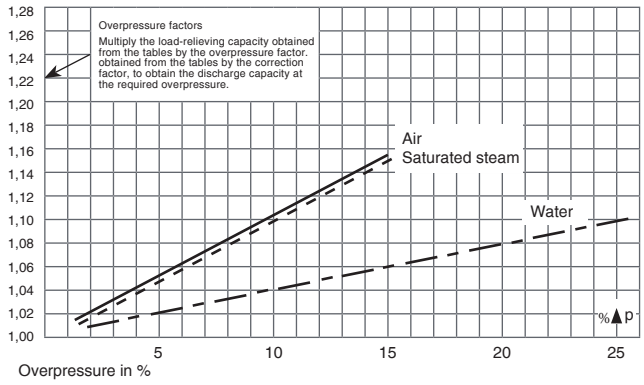

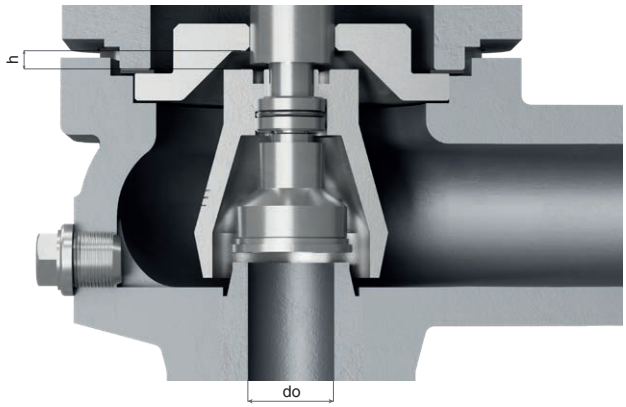

Saturated steam
Liquids
Gases

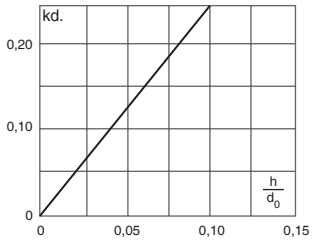

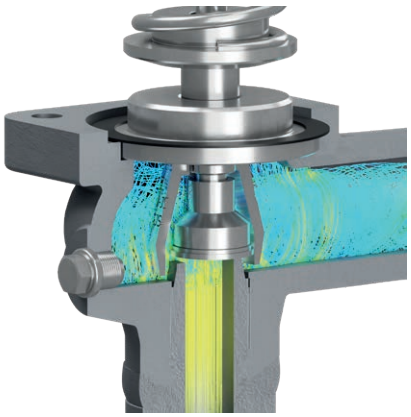

Fluid dynamics

Saturated steam
Gases

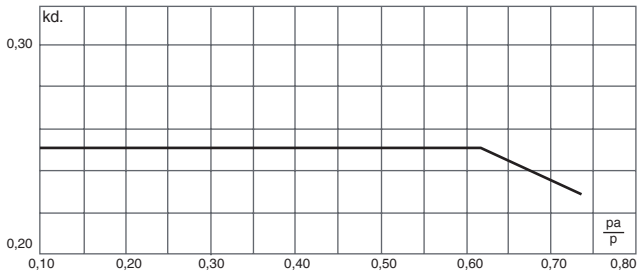

DISCHARGE CAPACITIES												
NPS1 x NPS2	1" x 1"			1 1/4" x 1 1/4"			1 1/2" x 1 1/2"			2" x 2"		
API ORIFICE	D-E			F			G			H		
d0 ["]	0,63			0,79			0,98			1,26		
$A0=\frac{\pi \cdot do^2}{4}$ ["²]	7,91			12,36			19,33			31,65		
p [psig]	I	II	III	I	II	III	I	II	III	I	II	III
333,6										6122	2211	227
348,1										6378	2294	232
377,1										6890	2478	241
406,1										7402	2662	250
435,1	3111	712	65	1979	1119	102	3111	1722	157	7915	2847	259
464,1	3313	758	67	2107	1191	105	3313	1833	162	8427	3031	268
493,1	3514	804	69	2235	1264	108	3514	1945	167	8939	3215	276
522,1	3715	850	71	2363	1336	112	3715	2056	172	9451	3399	284
551,2	3917	896	73	2491	1409	115	3917	2168	176	9963	3583	292
580,2	4118	942	75	2619	1481	118	4118	2279	181	10475	3767	299
609,2	4319	988	77	2747	1553	121	4319	2390	185	10987	3952	307
638,2	4520	1034	78	2875	1626	123	4520	2502	190	11499	4136	314
667,2	4722	1080	80	3003	1698	126	4722	2613	194	12011	4320	321
696,2	4923	1126	82	3131	1771	129	4923	2725	198	12524	4504	328
725,2	5124	1172	84	3259	1843	132	5124	2836	202	13036	4688	335
754,2	5326	1218	85	3387	1915	134	5326	2948	206	13548	4873	341
783,2	5527	1264	87	3515	1988	137	5527	3059	210	14060	5057	348
812,2	5728	1310	89	3643	2060	139	5728	3170	214	14572	5241	354
841,2	5930	1356	90	3771	2133	142	5930	3282	218	15084	5425	360
870,2	6131	1402	92	3899	2205	144	6131	3393	222	15596	5609	366
899,2	6332	1448	93	4027	2277	146	6332	3505	225	16108	5793	373
928,3	6534	1494	95	4155	2350	149	6534	3616	229	16621	5978	378
957,3	6735	1540	96	4283	2422	151	6735	3728	232	17133	6162	384
986,3	6936	1587	98	4411	2495	153	6936	3839	236	17645	6346	390
1015,3	7138	1633	99	4539	2567	156	7138	3950	239	18157	6530	396
1044,3	7339	1679	100	4667	2640	158	7339	4062	243	18669	6714	401
1073,3	7540	1725	102	4795	2712	160	7540	4173	246	19181	6899	407
1102,3	7742	1771	103	4923	2784	162	7742	4285	249	19693	7083	412
1131,3	7943	1817	104	5051	2857	164	7943	4396	253	20205	7267	418
1160,3	8144	1863	106	5179	2929	166	8144	4508	256	20717	7451	423
1189,3	8346	1909	107	5307	3002	168	8346	4619	259	21230	7635	428
1218,3	8547	1955	108	5435	3074	170	8547	4730	262	21742	7820	434
1247,3	8748	2001	110	5563	3146	172	8748	4842	265	22254	8004	439
1276,4	8949	2047	111	5691	3219	174	8949	4953	268	22766	8188	444
1305,4	9151	2093	112	5820	3291	176	9151	5065	271	23278	8372	449
1334,4	9352	2139	113	5948	3364	178	9352	5176	274	23790	8556	454
1363,4	9553	2185	115	6076	3436	180	9553	5287	277	24302	8740	459
1377,8	9654	2208	115	6140	3472	181	9654	5343	279	24558	8833	461

I - Saturated steam [lb/h].

II - Air to 60 °F and 14,50 psi [S.C.F.M].

III - Water to 70 °F [US- G.P.M]

For other, not so dense liquids, other than water at 70 °F apply:

$$V_L = \sqrt{\frac{\varrho_A}{\varrho_L}} \cdot V_A \text{ Ó } V_A = V_L \cdot \sqrt{\frac{\varrho_L}{\varrho_A}}$$

V_A = Water flow according to table.
V_L = Liquid flow.
ϱ_A = Water density at a 70 °F. (ϱ_A = 0,04 lb/pulg.³)
ϱ_L = Liquid density.

ATTENTION: Flow rates according to ASME VIII Div.1/API 520 with 10% overpressure.

Depending on demand

1 - Locking screw that facilitates the hydrostatic test of the container to be protected.
2 - Opening/closing indicator electrical contact.
3 - Balancing bellows to:
- Protect the spring against environmental influences.
- Ensure the valve body is completely sealed to the outside.
- To level out the back pressure generated by others or by the valve itself.

4 - Possibility of manufacturing in other types of material, for special working conditions (high temperatures, fluids, etc.).
5 - Degreased and totally free of oils and greases, to work with oxygen, avoiding possible fire risks. (UV-Oxygen-VBG 62).
6 - Special springs for critical temperatures.

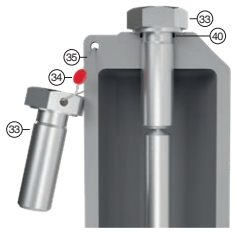

1 Locking screw

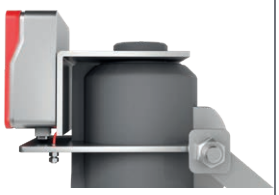

2 Open/closing indicator

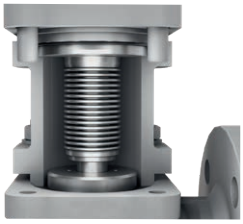

3 Balance bellows

33	Screw
34	Seal
35	Sealing whire
40	Joint

Specifications

— 90° angular flow.
— Activated by direct action helicoid spring.
— Simplicity of construction ensuring minimum maintenance.
— Materials carefully selected for their resistance to corrosion. With the exception of washers and couplings, the valves are free of non-ferric materials.
— Internal body designed to offer favourable flow profile.
— Sealing surfaces treated and balanced, making them extremely tightness, even exceeding EN 12266-1 requeriments.
— Great discharge capacity. For liquids typically used with openings similar to proportional safety valves.
— Equipped with draining screws for removing condensation.
— Auto-centering plug.
— Threaded shaft with lever positioner facilitating immediate manual action.
— Elevator, independent of the seal, designed facilitate sudden opening when the steam expands and, with any fluid, guarantees absolute opening and closing precision.
— All the valves are supplied sealed at the set pressure requested, simulating operational conditions, and are vigorously tested.
— All components are numbered, registered and checked. If requested in advance, material, casting, test and efficiency certificates will be enclosed with the valve, and the instruction manual, in accordance with P.E.D. 2014/68/EU.

www.vycindustrial.com
+34 93 735 76 90 119 info@vycindustrial.com
Avenc del Daví, 22 | Pol. Ind. Can Petit | 08227 · Terrassa (Barcelona) España

Informative brochure, without obligation and subject to our General Sales Conditions.