Normal safety valve. (AN)

Mod. 385 | ASME | USCS

EP

AP

ES

Operation

The valve works as an automatic pressure releasing regulator activated by the static pressure existing at the entrance to the valve and is characterized by its ability to open, at the fi rst proportional to the pressure increase, and after instantly and totally.

Regulation

- PED 2014/68/EU
- UNE-EN ISO 4126-1
- UNE-EN 12516-2
- ASME B1.20.1
- ASME VIII Div.1/API 520

Specifications

Size

- 1/4"x1" to 1 1/4"x2"

Temperature range

- -76 ˚F to +500 ˚F

Applications

- Gas, steam and liquids

Materials

- Cast steel
- Stainless steel

Maximum pressure

- Up to 1015 psi

Certification

PED 2014/68/EU
Module D
TÜVRheinland
CERTIFIED
www.tuv.com
ID 1100006108

Catalogue available in International System (SI) units in .PDF format.

N°. PIECE	PIECE	MATERIAL	
		CAST STEEL	STAINLESS STEEL
1	Body	Cast steel (EN-1.0619) I (SA-216 Gr. WCB)	Stainless steel (EN-1.4408) I (SA-351 Gr. CF8M)
2	Bell	Cast steel (EN-1.0619) I (SA-216 Gr. WCB)	Stainless steel (EN-1.4408) I (SA-351 Gr. CF8M)
3	Hood	Cast steel (EN-1.1191) I (AISI 1045) (1)	Stainless steel (EN-1.4305) I (AISI 303) (2)
4	Plug	Stainless steel (EN-1.4401) I (AISI 316)	Stainless steel (EN-1.4401) I (AISI 316)
5	Elevador	Stainless steel (EN-1.4401) I (AISI 316)	Stainless steel (EN-1.4401) I (AISI 316)
6	Seating	Stainless steel (EN-1.4401) I (SA-479 Gr. 316)	Stainless steel (EN-1.4401) I (SA-479 Gr. 316)
7	Purge cap	Stainless steel (EN-1.4401) I (SA-479 Gr. 316)	Stainless steel (EN-1.4401) I (SA-479 Gr. 316)
8	Guide	Stainless steel (EN-1.4401) I (SA-479 Gr. 316)	Stainless steel (EN-1.4401) I (SA-479 Gr. 316)
9	Rod	Stainless steel (EN-1.4401) I (SA-479 Gr. 316)	Stainless steel (EN-1.4401) I (SA-479 Gr. 316)
10	Hollow screw	Stainless steel (EN-1.4305) I (AISI 303)	Stainless steel (EN-1.4305) I (AISI 303)
11	Hollow screw nut	Stainless steel (EN-1.4305) I (AISI 303)	Stainless steel (EN-1.4305) I (AISI 303)
12	Piston (EP)	Stainless steel (EN-1.4305) I (AISI 303)	Stainless steel (EN-1.4305) I (AISI 303)
13	Gudgeon	Stainless steel (EN-1.4310) I (AISI 301)	Stainless steel (EN-1.4310) I (AISI 301)
14	Spring	Stainless steel (EN-1.4310) I (AISI 301)	Stainless steel (EN-1.4310) I (AISI 301)
15	Piston spring (EP)	Stainless steel (EN-1.4310) I (AISI 301)	Stainless steel (EN-1.4310) I (AISI 301)
16	Spring press	Stainless steel (EN-1.4301) I (AISI 304)	Stainless steel (EN-1.4301) I (AISI 304)
17	Separator	Stainless steel (EN-1.4301) I (AISI 304)	Stainless steel (EN-1.4301) I (AISI 304)
18	Lever	Stainless steel (EN-1.4301) I (AISI 304)	Stainless steel (EN-1.4301) I (AISI 304)
19	Ring (3)	Stainless steel (EN-1.4301) I (AISI 304)	Stainless steel (EN-1.4301) I (AISI 304)
20	Coupling	PTFE (Teflon)	PTFE (Teflon)
21	Sealing disk	PTFE (Teflon)	PTFE (Teflon)
22	O-ring (EP)	Fluorelastomer (Viton)	Fluorelastomer (Viton)
23	Sealing wire	Sealing wire	Sealing wire
24	Seal	Plastic	Plastic
NPT1 x NPT2		1/4" x 1" to 1 1/4" x 2"	
OPERATING CONDITIONS	MAWP AIR / LIQUID [psig]	1015	1015
	MAWP SATURATED STEAM [psig]	653	653
	TS [°F]	500	500
	ts [°F]	14	-76

(1) From 1"x1 1/2" in Cast steel (EN-1.0619). Version EP in Cast steel (EN-1.1191)
(2) From 1"x1 1/2" in Stainless steel (EN-1.4408). Version EP in Stainless steel (EN-1.4305)
(3) Stainless steel (EN-1.4568) for 1/2"x1" Stainless steel (EN-1.4310) for 3/4"x1 1/4"

Isometric view ES

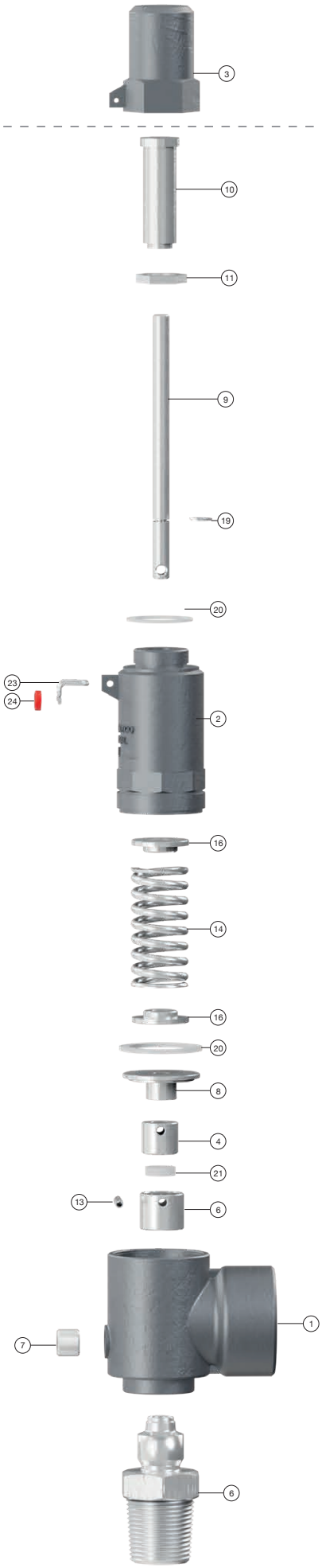

Exploded view ES

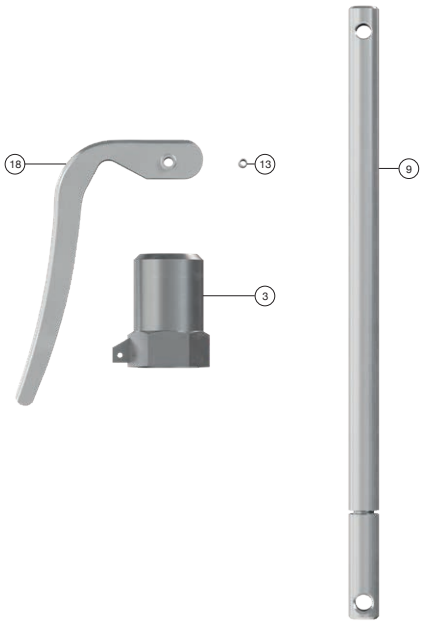

Exploded view AP

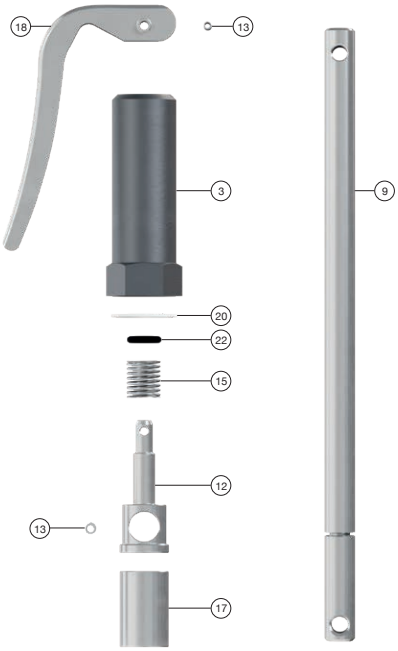

Exploded view EP

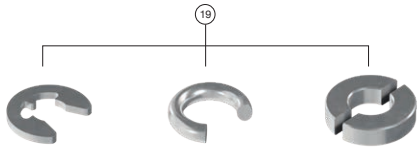

1/4" x 1"
3/8" x 1"
1/2" x 1"

3/4" x 1 1/4"

1" x 1 1/2"
1 1/4" x 2"

Rings

DIMENSIONS																			
NPT1 x NPT2		1/4" x 1"			3/8" x 1"			1/2" x 1"			3/4" x 1 1/4"			1"x1 1/2"			1 1/4" x 2"		
MODEL		ES	AP	EP	ES	AP	EP	ES	AP	EP	ES	AP	EP	ES	AP	EP	ES	AP	EP
d0 [in]		0,30			0,30			0,30			0,30			0,39			0,55		
A0 [in2]		0,07			0,07			0,07			0,07			0,12			0,24		
H [in]		6,10	6,61	8,07	6,10	6,61	8,07	6,22	6,73	8,19	8,35	8,86	10,20	10,20	10,67	11,93	13,35	13,98	15,31
h1 [in]		1,34			1,34			1,34			1,61			1,89			2,40		
L1 [in]		1,65			1,65			1,65			1,89			2,13			2,68		
L2 [in]		1,73			1,73			1,85			2,32			2,84			3,07		
R		1/8"			1/8"			1/8"			1/8"			1/8"			1/8"		
		Female threaded Gas Whitworth cylindrical UNE-EN ISO 228-1																	
WEIGHT [lb]	CAST STEEL / STAINLESS STEEL	1,47	1,55	1,77	1,49	1,59	1,78	1,52	1,60	1,82	2,17	2,25	2,62	5,24	5,43	5,97	10,26	10,54	11,30
CODE	CAST STEEL 2002-385.	00442	00441	00443	03842	03841	03843	00242	00241	00243	03442	03441	03443	01042	01041	01043	01442	01441	01443
	STAINLESS STEEL 2002-385.	00422	00421	00423	03822	03821	03823	00222	00221	00223	03422	03421	03423	01022	01021	01023	01422	01421	01423

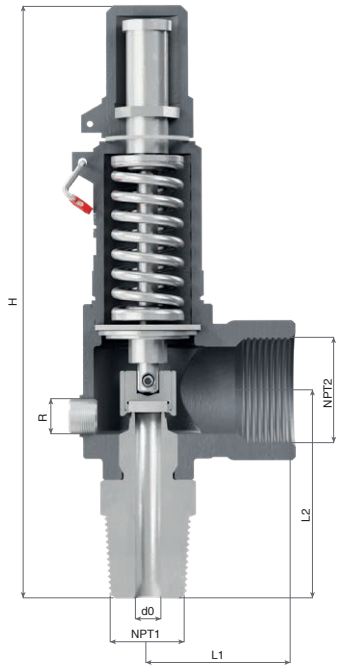

ES

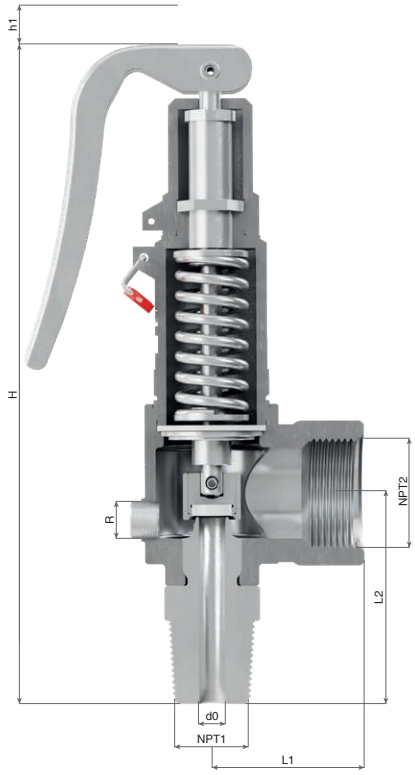

AP

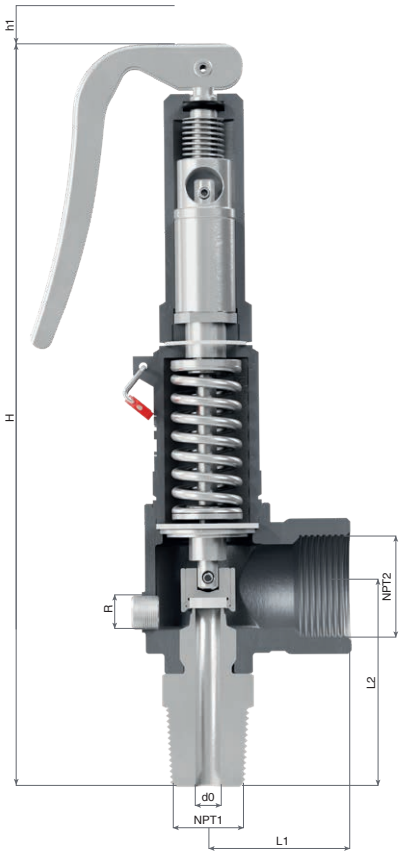

EP

PRESSURES AND SPRING REGULATION RANGES						
NPT1 x NPT2			1/4" x 1" 3/8" x 1" 1/2" x 1"	3/4" x 1 1/4"	1" x 1 1/2"	1 1/4" x 2"
SET PRESSURE [psig]	**MAXIMUM** (LIQUIDS AND GASES)		1015	1015	1015	1015
	MAXIMUM (SATURATED STEAM)		653	653	653	653
	MINIMUM	STEAM AND GASES	364	364	364	364
		LIQUIDS				
SPRING REGULATION RANGES [psig]	364 - 580	CODE	56127	56129	56132	56135
	532 - 870	CODE	56128	56130	56133	56136
	812 - 1015	CODE		56131	56134	56137

COEFFICIENT OF DISCHARGE				
NPT1 x NPT2	1/4" x 1" 3/8" x 1" 1/2" x 1"	3/4" x 1 1/4"	1" x 1 1/2"	1 1/4" x 2"
d0 [in]	0,30	0,30	0,39	0,55
h [in]	0,09	0,09	0,12	0,16
h/d0 [in]	0,0115	0,0115	0,0118	0,0113
STEAM AND GASES [Kdr]	0,35	0,62	0,62	0,62
LIQUIDS [Kdr]	0,27	0,54	0,54	0,54

Fluid dynamics

OVERPRESSURE AND RELEASE OF THE RESTART PRESSURE IN % OF REGULATION PRESSURE		
FLUID	OVERPRESSURE	DECREASE OF THE RESTART PRESSURE
SATURATED STEAM GAS	10 %	15% or 4,35 psi (The higher of the two values)
LIQUID	10 %	20% or 8,70 psi (The higher of the two values)
COUNTER PRESSURE INITIAL CONSTANT		**Adjust the spring by deducting the counter pressure to the regulation pressure.**
COUNTER PRESSURE GENERATED		**Max. 10% of regulation pressure**

RECOMMENDED RANGES OF APPLICATION				
MODEL		AP	ES	EP
FLUID	SATURATED STEAM	* (1)		*
	GAS	* (1)	*	*
	LIQUID	*	*	*

(1) When working with expensive or harmful fluids, use only ES or EP models.

DISCHARGE CAPACITY												
NPT1 x NPT2	1/4" x 1" 3/8" x 1" 1/2" x 1"			3/4" x 1 1/4"			1" x 1 1/2"			1 1/4" x 2"		
d0 [in]	0,30			0,30			0,39			0,55		
A0= $\frac{\pi \cdot do^2}{4}$ [in2]	0,07			0,07			0,12			0,24		
p [psig]	I	II	III	I	II	III	I	II	III	I	II	III
364,0	494	178	18	875	315	31	1582	569	56	3147	1132	112
377,0	511	184	18	905	326	32	1637	589	57	3256	1171	114
391,5	530	191	18	939	338	32	1698	611	58	3377	1215	116
406,0	549	197	19	972	350	33	1759	633	59	3498	1258	118
420,5	568	204	19	1006	362	33	1820	654	61	3619	1302	120
435,0	587	211	19	1040	374	34	1880	676	62	3740	1345	122
449,5	606	218	20	1073	386	35	1941	698	63	3861	1389	124
464,0	625	225	20	1107	398	35	2002	720	64	3982	1432	126
478,5	644	232	20	1141	410	36	2063	742	65	4103	1476	128
493,0	663	238	20	1174	422	36	2124	764	66	4224	1519	130
507,5	682	245	21	1208	434	37	2185	786	66	4345	1563	132
522,0	701	252	21	1242	447	37	2245	808	67	4466	1606	134
536,5	720	259	21	1275	459	38	2306	829	68	4587	1650	136
551,0	739	266	22	1309	471	38	2367	851	69	4708	1693	138
565,5	758	273	22	1343	483	39	2428	873	70	4829	1737	140
580,0	777	279	22	1376	495	39	2489	895	71	4950	1780	141
594,5	796	286	22	1410	507	40	2550	917	72	5071	1824	143
609,0	815	293	23	1443	519	40	2611	939	73	5192	1867	145
623,5	834	300	23	1477	531	41	2671	961	74	5313	1911	147
638,0	853	307	23	1511	543	41	2732	983	75	5434	1954	148
652,5	872	314	24	1544	555	42	2793	1005	75	5555	1998	150
667,0		320	24		568	42		1026	76		2041	152
681,5		327	24		580	43		1048	77		2085	153
696,0		334	24		592	43		1070	78		2128	155
710,5		341	25		604	44		1092	79		2172	156
725,0		348	25		616	44		1114	79		2215	158
739,5		355	25		628	44		1136	80		2259	160
754,0		361	25		640	45		1158	81		2302	161
768,5		368	26		652	45		1180	82		2346	163
783,0		375	26		664	46		1201	83		2390	164
797,5		382	26		676	46		1223	83		2433	166
812,0		389	26		689	47		1245	84		2477	167
826,5		396	26		701	47		1267	85		2520	169
841,0		402	27		713	47		1289	86		2564	170
855,5		409	27		725	48		1311	86		2607	172
870,0		416	27		737	48		1333	87		2651	173
884,5		423	27		749	49		1355	88		2694	175
899,0		430	28		761	49		1377	89		2738	176
913,5		436	28		773	49		1398	89		2781	177
928,0		443	28		785	50		1420	90		2825	179
942,5		450	28		797	50		1442	91		2868	180
957,0		457	29		810	50		1464	91		2912	182
971,5		464	29		822	51		1486	92		2955	183
986,0		471	29		834	51		1508	93		2999	184
1000,5		477	29		846	52		1530	93		3042	186
1015,0		484	29		858	52		1552	94		3086	187

I - Saturated steam [lb/h].

II - Air at 60 °F and 14,50 psi [S.C.F.M.]

III - Water at 70 °F [US - G.P.M.]

ATTENTION: Flow rates according to ASME VIII Div.1/API 520 with 10% overpressure.