Progressive opening safety relief valve. (AP)

Mod. 184 | ASME | USCS

Operation

The safety valve works as an automatic pressure releasing regulator activated by the static pressure existing at the entrance to the valve and is characterized by its ability to open proportional to the pressure increase.

Regulation

- ASME VIII Div.1.
- ASME II
- ASTM
- ASME/ANSI B16.5
- API-526

Specifications

Size

- 1" x 2" to 8" x 10"

Temperature range

- -20,2 ˚F to +842 ˚F

Applications

- Gas, steam and liquid

Materials

- Carbon steel
- Stainless steel

Maximum pressure

- Up to 2,9 psi

Certification

N°. PIECE	PIECE	MATERIAL	
		CARBON STEEL	STAINLESS STEEL
1	Body	Carbon steel (SA-216 Gr. WCB)	Stainless steel (SA 351-CF8M)
2	Closed bell	Nodular iron (60-40-1865-45-12)	Stainless steel (SA 351-CF8M)
3	Hood	Nodular iron (60-40-1865-45-12)	Stainless steel (SA 351-CF8M)
4	Seating	Stainless steel (AISI 420)	Stainless steel (AISI 630)
5	Plug	Stainless steel (AISI 420)	Stainless steel (AISI 630)
6	Guide	Stainless steel (AISI 304)	Stainless steel (AISI 304)
7	Rod	Stainless steel (AISI 420)	Stainless steel (AISI 316)
8	Safety ring	Stainless steel (AISI 301 / SA 313-302)	Stainless steel (AISI 301 / SA 313-302)
9	Hollow screw	Stainless steel (AISI 303)	Stainless steel (AISI 303)
10	Hollow screw nut	Stainless steel (AISI 303)	Stainless steel (AISI 303)
11	Nut	Carbon steel (AISI 1015/1016)	Carbon steel (AISI 316)
12	Washer	Carbon steel (AISI 1015/1016)	Carbon steel (AISI 316)
13	Stud	Carbon steel (AISI 1035)	Carbon steel (AISI 316)
14	Cap	Carbon steel (AISI 1035)	Carbon steel (AISI 316)
15	Body coupling	Graphite	PTFE (Teflon)
16	Hood coupling	PTFE (Teflon)	PTFE (Teflon)
17	Calibration disc	Stainless steel (AISI 316)	Stainless steel (AISI 316)
18	Clip	Stainless steel (AISI 301)	Stainless steel (AISI 301)
19	Seal	Plastic	Plastic
20	Sealing whire	Sealing whire	Sealing whire
21	Characteristic plate	Stainless steel (AISI 316)	Stainless steel (AISI 316)
NPS1 x NPS2		1" x 1" to 8" x 8"	
CLASS [lbs]		150	
OPERATING CONDITIONS	PRESSURE [psi]	2,9	
	MAXIMUM TEMPERATURE [°F]	842	
	MINIMUM TEMPERATURE [°F]	-20,2	
CLASS [lbs]		300	
OPERATING CONDITIONS	PRESSURE [psi]	2,9	
	MAXIMUM TEMPERATURE [°F]	842	
	MINIMUM TEMPERATURE [°F]	-20,2	

Isometric view

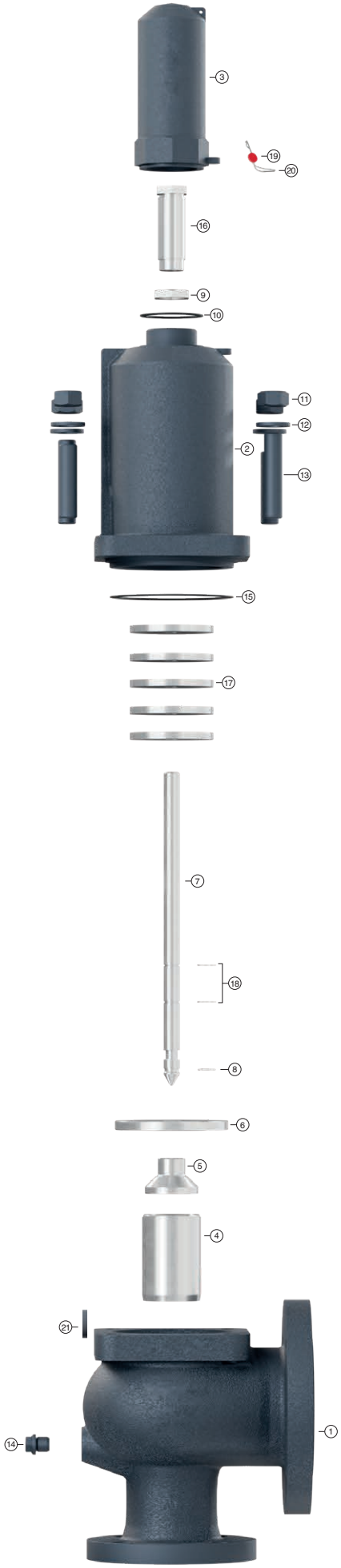

Exploded view

NPS1 x NPS2			1" x 1"	1 1/4" x 1 1/4"	1 1/2" x 1 1/2"	2" x 2"	2 1/2" x 2 1/2"	3" x 3"	4" x 4"	5" x 5"	6" x 6"	8" x 8"
API ORIFICE			D-E	F	G	H	J	L	N	P	P	Q
do ["]			0,63	0,79	0,98	1,26	1,57	1,97	2,48	3,03	3,66	4,33
Ao = $\frac{\pi \cdot do^2}{4}$ ["^{2}]			0,31	0,49	0,76	1,25	1,95	3,04	4,83	7,22	10,53	14,73
H ["]			14,45	16,22	17,17	19,61	21,46	26,18	29,33	31,89	42,13	47,24
h1 ["]			4,41	5,08	5,08	5,83	5,83	7,52	7,52	7,52	9,72	13,03
L1 ["]			4,50	4,75	4,75	4,88	4,88	6,50	8,25	9,00	9,00	9,50
L2 ["]			4,13	4,88	4,88	5,13	5,38	6,13	7,75	7,13	7,13	9,44
R ["]			1/4"	1/4"	1/4"	1/4"	1/4"	3/8"	3/8"	3/8"	3/8"	3/8"
Whitworth gas-tight cylindrical female thread ISO 228/1 (DIN-259)												
INLET FLANGE	Class150 lbs ASME/ANSI B16.5	D1 ["]	4,25	5	5	5	6	7,50	9	9	11	13,5
		K1 ["]	3,12	3,88	3,88	3,88	4,75	6	7,50	7,50	9,50	11,75
		l1 ["]	5/8	5/8	5/8	5/8	3/4	3/4	3/4	3/4	3/4	7/8
		b1 ["]	0,56	0,68	0,68	0,68	0,75	0,94	0,94	0,94	1	1,12
		DRILLS N°	4	4	4	4	4	4	8	8	8	8
	Class 300 lbs ASME/ANSI B16.5	D1 ["]	4,88	6,12	6,12	6,50	8,25	10	10	10	12,5	15
		K1 ["]	3,50	4,50	4,50	5	6,62	7,88	7,88	7,88	10,62	13
		l1 ["]	3/4	7/8	7/8	3/4	7/8	7/8	7/8	7/8	7/8	1
		b1 ["]	0,68	0,81	0,81	0,87	1,12	1,25	1,25	1,25	1,44	1,62
		DRILLS N°	4	4	4	8	8	8	8	8	12	12
OUTLET FLANGE	Class 150 lbs ASME/ANSI B16.5	D2 ["]	6	6	7	7,50	7,50 (9)*	9 (11)*	11	11	13,5	16
		K2 ["]	4,75	4,75	5,50	6	6 (7,50)*	7,50 (9,50)*	9,50	9,50	11,75	14,25
		l2 ["]	3/4	3/4	3/4	3/4	3/4 (3/4)*	3/4 (7/8)*	7/8	7/8	7/8	1
		b2 ["]	0,75	0,75	0,87	0,94	0,94 (0,94)*	0,94 (1)*	1	1	1,12	1,18
		DRILLS N°	4	4	4	4	4 (8)*	8 (8)*	8	8	8	12
MODEL			ES									
WEIGHT [lbs.]	CARBON STEEL	150#	14,93	17,36	24,57	38,31	54,63	74,59	103,64	167,35	190,52	300,51
		300#	1,98	19,10	26,93	39,87	55,97	78,03	111,65	179,52	208,94	323,41
	ACERO INOXIDABLE	150#	15,12	17,23	24,86	38,78	55,29	75,48	104,86	141,78	192,72	304,00
		300#	19,24	19,75	27,26	40,35	56,64	78,96	112,97	181,66	211,38	327,20
CODE	CARBON STEEL 2002-184.	150#	51042D	51442F	51242G	52042H	52242J	53042L	54042N	55042P	56042X	58042Q
		300#	81042D	81442F	81242G	82042H	82242J	83042L	84042N	85042P	86042X	88042Q
	ACERO INOXIDABLE 2002-184.	150#	51022D	51422F	51222G	52022H	52222J	53022L	54022N	55022P	56022X	58022Q
		300#	81022D	81422F	81222G	82022H	82222J	83022L	84022N	85022P	86022X	88022Q

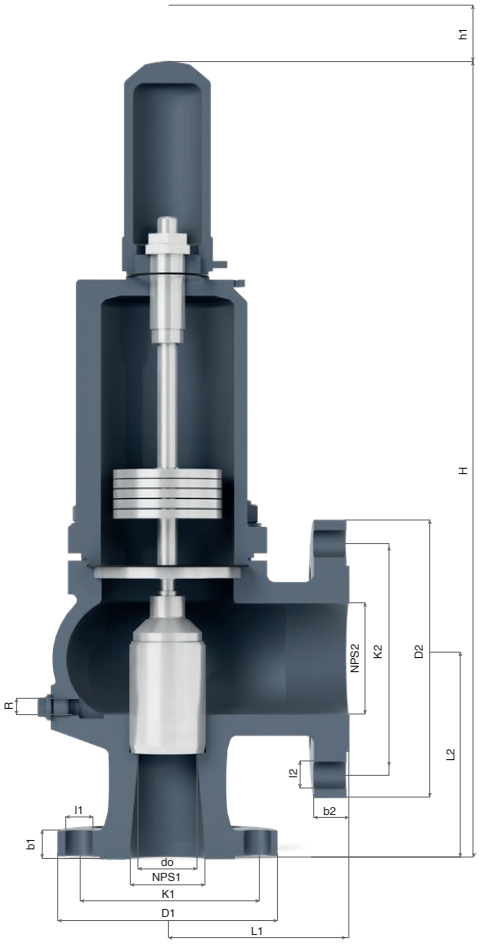

* Carbon steel (SA-216 Gr. WCB) and Stainless steel (SA 351-CF8M).

Centre to flange distance according to API-526.
*Dimensions corresponding to 300x150 lbs.

SET PRESSURES AND REGULATION RANGES												
DN1 x DN2			1" x 1"	1 1/4" x 1 1/4"	1 1/2" x 1 1/2"	2" x 2"	2 1/2" x 2 1/2"	3" x 3"	4" x 4"	5" x 5"	6" x 6"	8" x 8"
SET PRESSURE [psig]	**MAXIMUM** (LIQUIDS AND GASES)	150 lbs	2,9	2,9	2,9	2,9	2,9	2,9	2,9	2,9	2,9	2,9
		300 lbs	2,9	2,9	2,9	2,9	2,9	2,9	2,9	2,9	2,9	2,9
	MAXIMUM (SATURATED STEAM)	150 lbs	2,9	2,9	2,9	2,9	2,9	2,9	2,9	2,9	2,9	2,9
		300 lbs	2,9	2,9	2,9	2,9	2,9	2,9	2,9	2,9	2,9	2,9
	MINIMUM	STEAM AND GASES	0,725	0,725	0,725	0,725	0,725	0,725	0,725	0,725	0,725	0,725
		LIQUIDS	0,725	0,725	0,725	0,725	0,725	0,725	0,725	0,725	0,725	0,725

RECOMMENDED RANGES OF APPLICATION			
MODEL			ES
FLUID		SATURATED STEAM	
		GASES	*
		LIQUIDS	*
PERMISSIBLE BACK PRESSURE IN % OF SET PRESSURE	INTERNAL OR GENERATED	SATURATED STEAM GASES	15
		LIQUIDS	—
	EXTERNAL CONSTANT (1) (2)	SATURATED STEAM GASES	50
		LIQUIDS	90

OPEN AND CLOSED PRESSURES IN % OF SET PRESSURE		
FLUID	OPENING PRESSURE	CLOSING PRESSURE
SATURATED STEAM GASES	+ 10 %	- 4,35 psi
LIQUIDS	+ 10 %	- 8,70 psi

(1) With external constant backpressure, the spring is adjusted deducting the backpressure from the set pressure.

(2) If the set pressure <43,5 psi we must consider the total atmospheric pressure (14,5 psi) as external constant backpressure being freely released.

If pb >3,6 po we must limit plug speed with the consequent reduction of the ad coefficient of discharge Kdr.
With the new reduced coefficient we determine the do, in order to remove the necessary volume.

pa = Backpressure permitted (bar) absolute.
po = Set pressure (bar) absolute.
Kdr = Discharge coefficients.

COEFFICIENT OF DISCHARGE											
NPS1 x NPS2		1"x1"	1 1/4"x1 1/4"	1 1/2"x1 1/2"	2"x2"	2 1/2"x2 1/2"	3"x3"	4"x4"	5"x5"	6"x6"	8"x8"
do ["]		0,63	0,79	0,98	1,26	1,57	1,97	2,48	3,03	3,66	4,33
h ["]		0,08	0,08	0,10	0,14	0,16	0,20	0,26	0,31	0,37	0,43
h/do ["]		0,13	0,10	0,10	0,11	0,10	0,10	0,10	0,10	0,10	0,10
COEFFICIENT OF DISCHARGE [kdr]	SATURATED STEAM GASES	0,78									0,74
	SATURATED STEAM GASES	0,60								0,52	

NPS1 x NPS2	1"x1"			1 1/4"x1 1/4"		
API ORIFICE	D-E			F		
d0 ["]	0,63			0,79		
$A0= \frac{\pi \cdot do^2}{4}$ ["2]	0,31			0,49		
p [psig]	I	II	III	I	II	III
0,725	175	63	14	275	99	21
0,797	175	63	14	276	99	21
0,870	176	63	14	277	100	22
0,942	177	64	14	278	100	22
1,015	177	64	14	279	100	22
1,087	178	64	14	280	101	22
1,160	179	64	14	281	101	23
1,232	179	65	14	282	101	23
1,305	180	65	15	283	102	23
1,377	181	65	15	284	102	23
1,450	182	65	15	286	103	23
1,522	182	66	15	287	103	24
1,595	183	66	15	288	103	24
1,667	184	66	15	289	104	24
1,740	184	66	15	290	104	24
1,813	185	67	15	291	105	24
1,885	186	67	16	292	105	24
1,958	186	67	16	293	105	25
2,030	187	67	16	294	106	25
2,103	188	68	16	295	106	25
2,175	189	68	16	296	107	25
2,248	189	68	16	298	107	25
2,320	190	68	16	299	107	26
2,393	191	69	16	300	108	26
2,465	191	69	16	301	108	26
2,538	192	69	17	302	109	26
2,610	193	69	17	303	109	26
2,683	193	70	17	304	109	26
2,755	194	70	17	305	110	27
2,828	195	70	17	306	110	27
2,900	196	70	17	307	111	27

I - Saturated steam [lb/h].

II - Air to 60 °F and 14,50 psi [S.C.F.M].

III - Water to 70 °F [US- G.P.M]

ATTENTION: Flow rates according to ASME VIII Div.1/API 520 with 10% overpressure.

DISCHARGE CAPACITY

1 1/2"x1 1/2"			2"x2"			2 1/2"x2 1/2"			3"x3"			4"x4"			5"x5"			6"x6"			8"x8"		
G			H			J			L			N			P			P			Q		
0,98			1,26			1,57			1,97			2,48			3,03			4,33			6,10		
0,76			1,25			1,95			3,04			4,83			7,22			14,73			29,25		
I	II	III	I	II	III	I	II	III	I	II	III	I	II	III	I	II	III	I	II	III	I	II	III
422	152	33	698	251	54	1084	390	84	1707	614	132	2705	973	210	4038	1452	313	5107	1837	396	7148	2571	554
424	153	33	701	252	55	1089	392	85	1714	616	134	2716	977	212	4055	1458	316	5127	1844	400	7176	2581	560
426	153	33	704	253	55	1093	393	86	1721	619	135	2727	981	214	4071	1464	319	5148	1851	404	7205	2591	565
428	154	34	707	254	56	1097	395	87	1728	621	136	2738	985	216	4087	1470	322	5168	1859	408	7233	2601	570
429	154	34	710	255	56	1102	396	87	1734	624	138	2749	989	218	4103	1476	325	5188	1866	411	7262	2612	576
431	155	34	712	256	57	1106	398	88	1741	626	139	2759	992	220	4119	1481	328	5209	1873	415	7290	2622	581
433	156	35	715	257	57	1110	399	89	1748	629	140	2770	996	222	4135	1487	331	5229	1881	419	7319	2632	586
434	156	35	718	258	58	1115	401	90	1755	631	141	2781	1000	224	4151	1493	334	5250	1888	423	7348	2643	592
436	157	35	721	259	58	1119	402	91	1762	634	143	2792	1004	226	4168	1499	337	5270	1895	426	7376	2653	597
438	157	36	723	260	59	1123	404	91	1769	636	144	2803	1008	228	4184	1505	340	5291	1903	430	7405	2663	602
439	158	36	726	261	59	1128	406	92	1775	639	145	2814	1012	230	4200	1511	343	5311	1910	434	7433	2673	607
441	159	36	729	262	60	1132	407	93	1782	641	146	2824	1016	232	4216	1516	346	5331	1917	437	7462	2684	612
443	159	36	732	263	60	1136	409	94	1789	643	147	2835	1020	234	4232	1522	349	5352	1925	441	7491	2694	617
444	160	37	735	264	61	1141	410	94	1796	646	149	2846	1024	235	4248	1528	351	5372	1932	444	7519	2704	622
446	160	37	737	265	61	1145	412	95	1803	648	150	2857	1028	237	4265	1534	354	5393	1940	448	7548	2715	627
448	161	37	740	266	62	1149	413	96	1810	651	151	2868	1031	239	4281	1540	357	5413	1947	451	7576	2725	632
449	162	38	743	267	62	1154	415	97	1816	653	152	2879	1035	241	4297	1545	360	5434	1954	455	7605	2735	636
451	162	38	746	268	63	1158	416	97	1823	656	153	2889	1039	243	4313	1551	362	5454	1962	458	7634	2745	641
453	163	38	749	269	63	1162	418	98	1830	658	154	2900	1043	245	4329	1557	365	5474	1969	462	7662	2756	646
455	163	38	751	270	64	1167	420	99	1837	661	155	2911	1047	246	4345	1563	368	5495	1976	465	7691	2766	651
456	164	39	754	271	64	1171	421	99	1844	663	157	2922	1051	248	4361	1569	370	5515	1984	468	7719	2776	655
458	165	39	757	272	65	1175	423	100	1850	666	158	2933	1055	250	4378	1574	373	5536	1991	472	7748	2787	660
460	165	39	760	273	65	1180	424	101	1857	668	159	2943	1059	252	4394	1580	376	5556	1998	475	7776	2797	665
461	166	40	763	274	65	1184	426	102	1864	670	160	2954	1063	253	4410	1586	378	5577	2006	478	7805	2807	669
463	167	40	765	275	66	1188	427	102	1871	673	161	2965	1066	255	4426	1592	381	5597	2013	482	7834	2817	674
465	167	40	768	276	66	1193	429	103	1878	675	162	2976	1070	257	4442	1598	383	5617	2020	485	7862	2828	679
466	168	40	771	277	67	1197	431	104	1885	678	163	2987	1074	259	4458	1604	386	5638	2028	488	7891	2838	683
468	168	41	774	278	67	1201	432	104	1891	680	164	2998	1078	260	4475	1609	388	5658	2035	491	7919	2848	687
470	169	41	777	279	68	1206	434	105	1898	683	165	3008	1082	262	4491	1615	391	5679	2042	494	7948	2859	692
471	170	41	779	280	68	1210	435	106	1905	685	166	3019	1086	264	4507	1621	393	5699	2050	498	7977	2869	696
473	170	41	782	281	68	1214	437	106	1912	688	167	3030	1090	265	4523	1627	396	5720	2057	501	8005	2879	701

For other, not so dense liquids, other than water at 70 °F apply:

$$V_L = \sqrt{\frac{\varrho_A}{\varrho_L}} \cdot V_A \text{ Ó } V_A = V_L \cdot \sqrt{\frac{\varrho_L}{\varrho_A}}$$

V_A = Water flow according to table.
V_L = Liquid flow.
ϱ_A = Water density at a 70 °F.
(ϱ_A = 0,04 lb/pulg.^{3})
ϱ_L = Liquid density.

Depending on demand

1.- Fluoroelastomer seals (Viton), Silicone rubber, PTFE (Teflon), etc., achieving leakage rates lower than: $0{,}3 \times 10^{-3} \frac{Pa\ cm^3}{sec.}$

The ranges of application allow certain flexibility although we recommend limiting them to:

RANGE OF APPLICATION FOR THE SEALS						
FLUID		Set pressure [psig] 0,725 a 2,900				
SATURATED STEAM		S	V	T		
LIQUIDS AND GASES		S	V	T		
SEALS		TEMPERATURE [°F]				
		ACCORDING TO MANUFACTURERS		RECOMMENDEN BY VYC		
		MINIMUM	MAXIMUM	MINIMUM	MAXIMUM	
SILICONE RUBBER	S	-74	+392	-58	+239	
FLUORELASTOMER (VITON)	V	-40	+482	-22	+302	
PTFE (TEFLON)	T	-445	+500	-112	+446 (1)	

(1) For temperatures exceeding 446 °F apply metallic seal only

2.- Totally free of oil and grease, to work with oxygen, avoiding possible fire risks (UV-Oxygen-VBG 62).

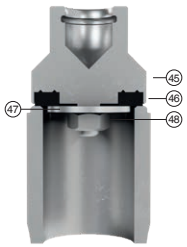

1 Soft closing

N°. PIECE	PIECE	MATERIAL	
		CARBON STEEL	STAINLESS STEEL
45	Plug	Stainless steel (AISI 316)	Stainless steel (AISI 316)
46	Sealing disk	PTFE (Teflon)	PTFE (Teflon)
		Silicone's rubber	Silicone's rubber
		Fluorelastomere (Viton)	Fluorelastomere (Viton)
47	Washer	Stainless steel (AISI 316)	Stainless steel (AISI 316)
48	Nut	Carbon steel (AISI 1015/1016)	Carbon steel (AISI 1015/1016)

Specifications

— 90° angular flow.
— Activated by a system of weights.
— Simplicity of construction ensuring minimum maintenance.
— Materials carefully selected for their resistance to corrosion. With the exception of washers and couplings, the valves are free of non-ferric materials.
— Internal body designed to offer favourable flow profile.
— Sealing surfaces treated and balanced, making them extremely tightness, even exceeding API-527 requeriments.
— Great discharge capacity.
— Equipped with draining screws for removing condensation.
— Auto-centering plug.
— All the valves are supplied sealed at the set pressure requested, simulating operational conditions, and are vigorously tested.
— All components are numbered, registered and checked. If requested in advance, material, casting, test and efficiency certificates will be enclosed with the valve, and the instruction manual.

www.vycindustrial.com
+34 93 735 76 90 119 info@vycindustrial.com
Avenc del Daví, 22 | Pol. Ind. Can Petit | 08227 · Terrassa (Barcelona) España

Informative brochure, without obligation and subject to our General Sales Conditions.